EXISITNG PANEL BD

LOCATION: DELI BAKERY — VOLTAGE: 208Y/120V — TRIM: SURFACE
MAIN: 225A MLO — SYSTEM: 3Ø, 4W — BUS RATING 225A
CONN. LOAD: 76.7 KVA — FEED: TOP — GROUND BUS: YES

EMS	CKT	LOAD SERVED	COND	PHASE	NEUT	GND	BKR	DMD	L1	L2	L3	DMD	BKR	COND	PHASE	NEUT	GND	LOAD SERVED	CKT	EMS
-	1	**COUNTERTOP INDUCTION RANGE**	3/4"	#12	#12	#12	20/1	K	1800/180			R	20/1	3/4"	#12	#12	#12	WRAP TABLE MOVED FROM CKT#30	2	-
-	3	PRODUCE PROMO#1	3/4"	#12	#12	#12	30/1	R		600/3000		K	45/3	3/4"	#8	#8	#10	CHICKEN ROTISSIRIE	4	-
-	5	WRAP MACHINE	3/4"	#12	#12	#12	20/1	R			180/3000	K			#8			"	6	-
-	7	GLASS DOOE REFRIG (SELF CONTAINED)	3/4"	#12	#12	#12	20/1	R	1200/3000			K			#8			"	8	-
-	9	SCALE	3/4"	#12	#12	#12	20/1	R		540/–		–	–	–	–	–	–	SHUNT TRIP	10	-
-	11	RTU-RECEPTACLE & BAKERY TABLE REC(MOVED FROM CKT#7)	3/4"	#12	#12	#12	20/1	R			360/1800	R	20/1	3/4"	#12	#12	#12	HOT DELI CASE & DELI MONITOR REC	12	-
-	13	WRAP TABLE	3/4"	#12	#12	#12	20/1	R	1200/780			R	20/1	3/4"	#12	#12	#12	OVEN CONTROL	14	-
-	15	ICE MACHINE	3/4"	#12	#12	#12	20/1	R		1200/1800		K	20/3	3/4"	#12	#12	#12	OVEN	16	-
-	17	DRINK MACHINE	3/4"	#12	#12	#12	20/1	R			1200/1800	K			#12			"	18	-
-	19	CORD DROP	3/4"	#12	#12	#12	20/1	R	360/1800			K			#12			"	20	-
-	21	SHUNT TRIP	–	–	–	–	–	–		–/2000		W	20/1	3/4"	#10	#10	#10	MOVED FROM CKT 23 WATER HEATER	22	-
-	23	SHOE CONVECTION OVEN	3/4"	#8	#8	#10	40/3	K			3720/5760	K	60/3	1"	#6	#6	#10	HOT WING BAR	24	-
-	25	"		#8				K	3720/5760			K			#6			"	26	-
-	27	"		#8				K		3720/5760		K			#6			"	28	-
-	29	SEATING AREA, RESTROOMS -LIGHTS	3/4"	#12	#12	#12	20/1	L			1274/1080	R	20/3	3/4"	#12	#12	#12	MIXER	30	-
-	31	FREEZER/STORAGE-LIGHTS	3/4"	#12	#12	#12	20/1	L	1152/1080			R			#12			"	32	-
-	33	BAKERY-LIGHTS	3/4"	#12	#12	#12	20/1	L		1542/1080		R			#12			"	34	-
-	35	BAKERY-LIGHTS	3/4"	#12	#12	#12	20/1	L			1482/1200	R	20/1	3/4"	#12	#12	#12	MICROWAVE(MOVED FROM CKT #21)	36	-
-	37	DELI/BAKERY-LIGHTS	3/4"	#12	#12	#12	20/1	L	1482/780			R	20/1	3/4"	#12	#12	#12	PROOFER CONTROL	38	-
-	39	DELI/BAKERY-LIGHTS	3/4"	#12	#12	#12	20/1	L		684/3120		K	40/2	3/4"	#8	#8	#10	PROOFER	40	-
-	41	APNINI	3/4"	#12	#12	#12	20/1	R			1405/3120	K			#8			"	42	-
		INTERRUPT RATING: EXISTING							24294	25046	27381							FROM: EXISTING MDP-4		

LOADS (IN VA)	CONNECTED	DEMAND FACTOR	MINIMUM FEEDER	LOADS	CONNECTED	DEMAND FACTOR	MINIMUM FEEDER
LIGHTING	7616	1.25	9520	NON-SEASONAL MOTORS	0	1.0	0
RECEPTS TO 10 KVA	10000	1.0	10000	LARGEST MOTOR	0	0.25	0
RECEPTS REMAINING	6225	0.5	3113				
SPACE HEATING	0	0.0	0	WATER HEATING	2000	1.0	2000
AIR CONDITIONING	0	1.0	0	KITCHEN EQUIP.	50880	0.65	33072

REMAINING CONTINUOUS LOADS 0 1.25 0
REMAINING NON-CONTINUOUS LOADS 0 1.0 0
MISC. DEMAND LOADS 0 1.0 0
TOTAL CONNECTED LOAD 76.7 KVA 213.1 AMPS
TOTAL DEMAND LOAD 57.7 KVA 160.3 AMPS

Note 1. Provide GFIC rated breaker(s) for circuit(s) 7
Note 2. Provide Lockable breaker(s) for circuit(s) 4

NEW PANEL K

LOCATION: DELI BAKERY — VOLTAGE: 208Y/120V — TRIM: SURFACE
MAIN: 100A MLO — SYSTEM: 3Ø, 4W — BUS RATING 100A
CONN. LOAD: 12.4 KVA — FEED: TOP — GROUND BUS: YES

EMS	CKT	LOAD SERVED	COND	PHASE	NEUT	GND	BKR	DMD	L1	L2	L3	DMD	BKR	COND	PHASE	NEUT	GND	LOAD SERVED	CKT	EMS
-	1	4 FT HOOD EXHAUST FAN	3/4"	#12	#12	#12	20/3	M	552/288			M	15/3	3/4"	#12	#12	#12	MAU FAN	2	-
-	3	"		#12				M		552/288		M			#12			"	4	-
-	5	"		#12				M			552/288	M			#12			"	6	-
-	7	8 FT HOOD EXHAUST FAN	3/4"	#12	#12	#12	20/3	M	900/600			R	20/1	3/4"	#12	#12	#12	BREAD SLICER	8	-
-	9	"		#12				M		900/600		R	20/1	3/4"	#12	#12	#12	MANUAL MEAT SLICER	10	-
-	11	"		#12				M			900/600	R	20/1	3/4"	#12	#12	#12	MANUAL MEAT SLICER	12	-
7	13	(C2) 12' FROZEN BAKERY-LTS	3/4"	#12	#12	#12	20/1	L	245/180			R	20/1	3/4"	#12	#12	#12	PHOTO CAKE PREP PRINTER	14	-
-	15	(C2) 12' FROZEN BAKERY-FAN	3/4"	#12	#12	#12	20/1	M		324/180		R	20/1	3/4"	#12	#12	#12	PHOTO CAKE PREP RECEBTACLE	16	-
-	17	(C2) 12' FROZEN BAKERY-HTR	3/4"	#12	#12	#12	20/1	N			738/644	L	20/1	3/4"	#12	#12	#12	(B5) DELI BAKERY-LTS	18	6
6	19	(B4) COLD DELI SERVICE-LTS	3/4"	#12	#12	#12	20/1	L	483/621			M	20/1	3/4"	#12	#12	#12	(B5) DELI BAKERY-FAN	20	-
-	21	(B4) COLD DELI SERVICE -FAN	3/4"	#12	#12	#12	20/1	M		345/–		–	20/1	–	–	–	–	SPARE	22	-
-	23	SPARE	–	–	–	–	20/1	–			–/–	–	20/1	–	–	–	–	SPARE	24	-
		INTERRUPT RATING: 10,000 AIC (MATCH EXISTING)							3869	4789	3722							FROM: EXISTING PANEL PDM		

LOADS (IN VA)	CONNECTED	DEMAND FACTOR	MINIMUM FEEDER	LOADS	CONNECTED	DEMAND FACTOR	MINIMUM FEEDER
LIGHTING	1372	1.25	1715	NON-SEASONAL MOTORS	8110	1.0	8110
RECEPTS TO 10 KVA	2160	1.0	2160	LARGEST MOTOR	2700	0.25	675
RECEPTS REMAINING	0	0.5	0				
SPACE HEATING	0	0.0	0	WATER HEATING	0	1.0	0
AIR CONDITIONING	0	1.0	0	KITCHEN EQUIP.	0	1.0	0

REMAINING CONTINUOUS LOADS 0 1.25 0
REMAINING NON-CONTINUOUS LOADS 738 1.0 738
MISC. DEMAND LOADS 0 1.0 0
TOTAL CONNECTED LOAD 12.4 KVA 34.4 AMPS
TOTAL DEMAND LOAD 13.4 KVA 37.2 AMPS

LEGEND:

- JUNCTION BOX
- CEILING MOUNTED RECEPTACLE
- WP — WEATHER PROOF COVER PLATE
- GFI — GROUND FAULT INTERRUPTING RECEPTACLE
- IG — ISOLATED GROUND RECEPTACLE
- SPECIAL USE RECEPTACLE. VOLTAGE, PHASE AND AMPERAGE BASED ON LOAD SERVED. COORDINATE NEMA CONFIGURATION WITH EQUIPMENT REQUIREMENTS.
- FLOOR STUB UP
- MOTOR RATED SWITCH
- DISCONNECT SWITCH-TYPE AS NOTED
- ELECTRICAL CONNECTION UNDER CASE
- ELECTRICAL DROP FROM OVERHEAD
- EXISTING ELECTRICAL STUB-UP
- REFRIGERATION CIRCUIT NUMBER
- SC — SCALE SYSTEM DATA PORT (SEE SCALE SYSTEM NOTES)
- ELECTRICAL CONNECTION UNDER CASE. REUSE EXISTING STUBS WHERE POSSIBLE. COORDINATE CONDUIT ROUTING WITH THE FOOD LION CONSTRUCTION SUPERVISOR.
- XX — ENERGY MANAGEMENT CIRCUIT

EXISITNG PANEL BDM

LOCATION: DELI BAKERY — VOLTAGE: 208Y/120V — TRIM: SURFACE
MAIN: 400A MLO — SYSTEM: 3Ø, 4W — BUS RATING 400A
CONN. LOAD: 125.4 KVA — FEED: TOP — GROUND BUS: YES

EMS	CKT	LOAD SERVED	COND	PHASE	NEUT	GND	BKR	DMD	L1	L2	L3	DMD	BKR	COND	PHASE	NEUT	GND	LOAD SERVED	CKT	EMS
-	1	SHUNT TRIP	–	–	–	–	–	–	–/2382			K	30/1	3/4"	#10	#10	#10	OLIVE BAR	2	-
-	3	COMBI. OVEN	1-1/4"	#4	#4	#8	70/3	K		6240/2382		K	30/1	3/4"	#12	#12	#12	OLIVE/MUSHROOMS	4	-
-	5	"		#4				K			6240/1560	R	20/2	3/4"	#12	#12	#12	SOUP BAR	6	-
-	7	"		#4				K	6240/1560			R			#12			"	8	-
-	9	SANDWICH STATION	3/4"	#12	#12	#12	20/1	R		1200/3960		K	80/3	1-1/4"	#3	#3	#8	CHICKEN FRYER	10	-
-	11	SANDWICH STATION	3/4"	#12	#12	#12	20/1	R			1200/3960	K			#3			"	12	-
-	13	SHUNT POWER	–	–	–	–	–	–	–/3960			K			#3			"	14	-
-	15	HOOD-LIGHTS	3/4"	#12	#12	#12	20/1	L		500/–		–	–	–	–	–	–	SHUNT TRIP	16	-
-	17	NEW PANEL K	SEE RISER DIAGRAM				100/3	SF			3869/2163	K	30/2	3/4"	#10	#10	#10	HOT CHICKEN PASS THRU	18	-
-	19	"						SF	3189/2163			K			#10			"	20	-
-	21	"						SF		3722/1200		K	20/1	3/4"	#12	#12	#12	ALTO SHAM	22	-
-	23	BAKERY FREEZER DOOR. HTRS	3/4"	#12	#12	#12	20/1	R			100/–	–	–	–	–	–	–	SHUNT TRIP	24	-
-	25	**FLY TRAP**	3/4"	#12	#12	#12	20/1	R	540/500			R	20/1	3/4"	#12	#12	#12	TV	26	-
-	27	PIZZA HOLDING	3/4"	#12	#12	#12	20/1	R		1200/780		R	20/1	3/4"	#12	#12	#12	OVEN CONTROLS	28	-
-	29	RETARDER	3/4"	#10	#10	#10	25/1	K			2268/13440	K	100/3	1-1/4"	#3	#3	#8	OVEN	30	-
-	31	HOT BAR	3/4"	#8	#8	#10	30/2	K	3225/13440			K			#3			"	32	-
-	33	"		#8				K		3225/13440		K			#3			"	34	-
-	35	MOVED FROM CKT 36&38 (STORAGE & RR) RECEPTACLE	3/4"	#12	#12	#12	20/1	R			1000/3720	K	40/3	3/4"	#8	#8	#10	HOT DELI CASE	36	-
-	37	BUG LIGHT/PHOTO CAKE	3/4"	#12	#12	#12	20/1	L	500/3720			K			#8			"	38	-
-	39	BUG LIGHT	3/4"	#12	#12	#12	20/1	L		1100/3720		K			#8			"	40	-
-	41	COFFEE MACHINE	3/4"	#12	#12	#12	20/1	R			1200/600	R	20/1	3/4"	#12	#12	#12	MANUAL MEAT SLICER	42	-
		INTERRUPT RATING: EXISTING							41419	42669	41320							FROM: EXISTING PANEL MDP-4		

LOADS (IN VA)	CONNECTED	DEMAND FACTOR	MINIMUM FEEDER	LOADS	CONNECTED	DEMAND FACTOR	MINIMUM FEEDER
LIGHTING	3472	1.25	4340	NON-SEASONAL MOTORS	6510	1.0	6510
RECEPTS TO 10 KVA	10000	1.0	10000	LARGEST MOTOR	2700	0.25	675
RECEPTS REMAINING	3600	0.5	1800				
SPACE HEATING	0	0.0	0	WATER HEATING	0	1.0	0
AIR CONDITIONING	0	1.0	0	KITCHEN EQUIP.	101088	0.65	65707

REMAINING CONTINUOUS LOADS 0 1.25 0
REMAINING NON-CONTINUOUS LOADS 738 1.0 738
MISC. DEMAND LOADS 0 1.0 0
TOTAL CONNECTED LOAD 125.4 KVA 348.4 AMPS
TOTAL DEMAND LOAD 89.8 KVA 249.4 AMPS

Note 1. Feeder size: SEE RISER DIAGRAM

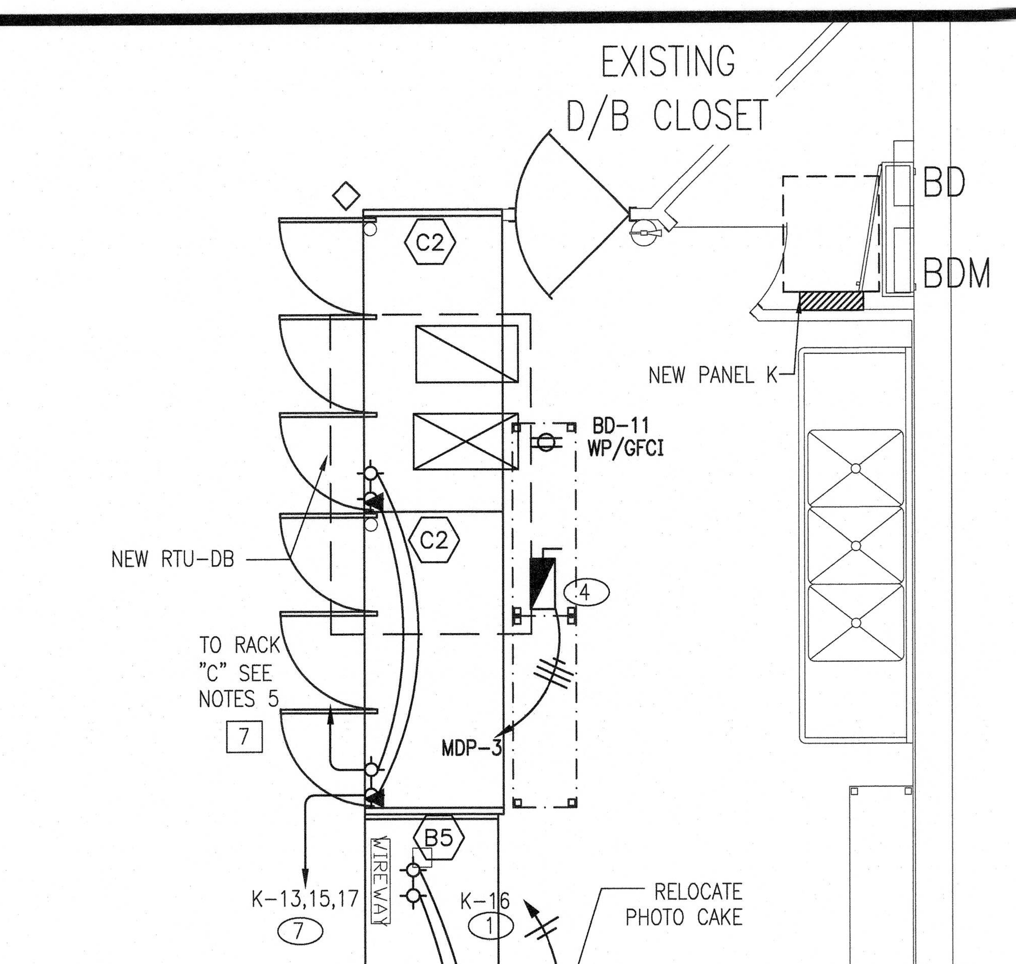

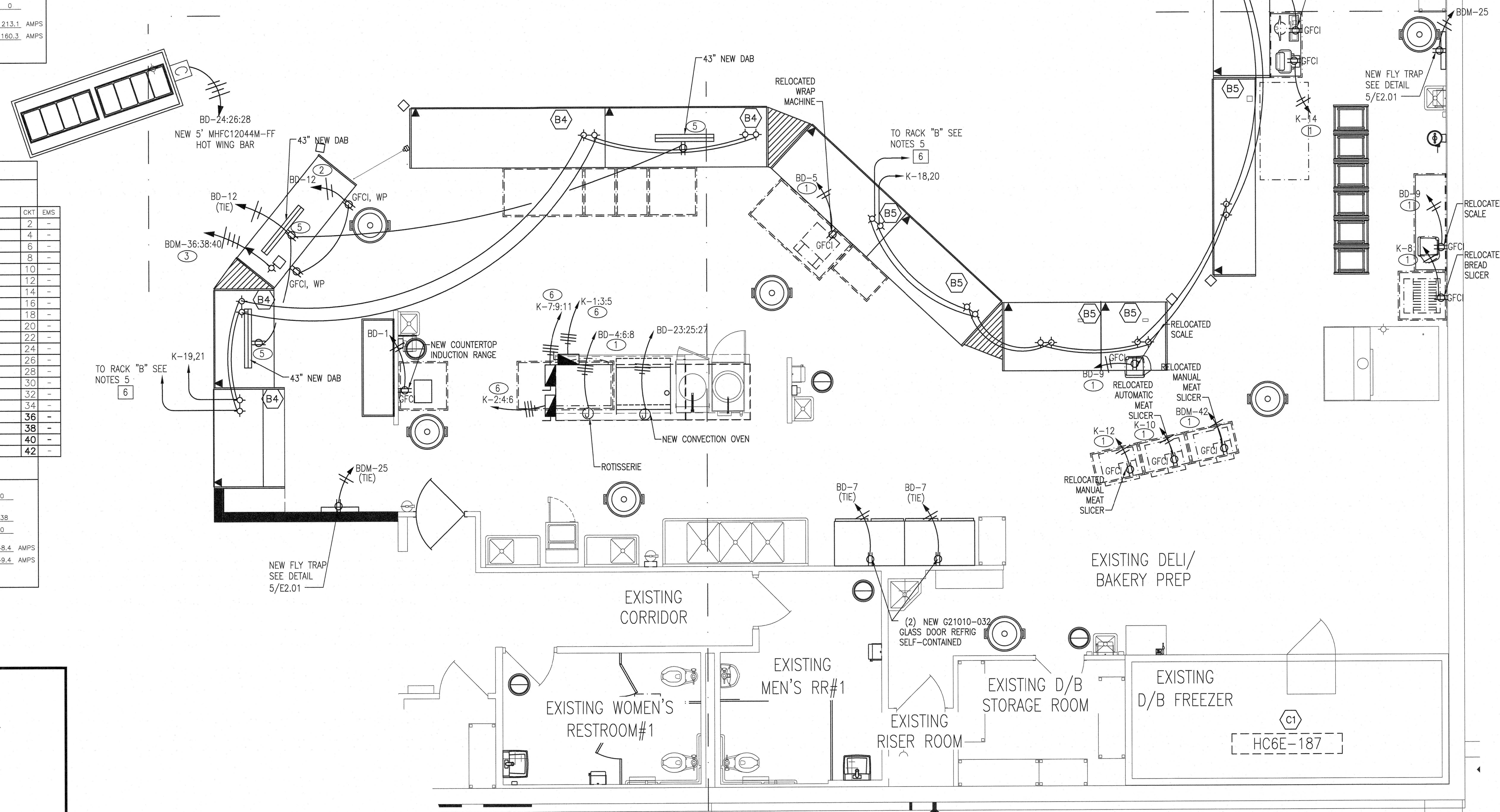

1 ENLARGED DELI/BAKERY EQUIPMENT PLAN
E4.01 SCALE: 1/4" = 1'-0"

GENERAL NOTES:

1. SEE MECHANICAL DRAWINGS FOR KITCHEN HOOD SCHEDULE. ELECTRICAL CONTRACTOR TO MAKE FINAL CONNECTIONS TO EXHAUST FAN, LIGHT, & SWITCHES.
2. PROVIDE SEAL-TITE FLEX ON ALL DELI/BAKERY EQUIPMENT/CASES: 3 FT. (MIN.) ON FLOOR CIRCUITS AND 4 FT. (MIN.) ON WALL CIRCUITS.
3. ELECTRICAL CONTRACTOR SHALL PROVIDE ALL CONTROL WIRING FOR SHUNT TRIP SYSTEM AT EXHAUST HOOD AND EQUIPMENT.
4. PROVIDE 1'-0" OF FLEX CONDUIT AND A 2"X4" BOX WITH A DUPLEX RECEPTACLE.
5. (1) 4-CONDUCTOR SHIELDED CABLE (#22 AWG OR LARGER)
   (2) CONDUCTOR (BLACK & WHITE) - FOR TEMPERATURE SENSOR, INDICATED AS:
   (2) CONDUCTOR (RED & GREEN) - FOR DEFROST TERMINATION, INDICATED AS:
6. DIMENSIONS ARE SHOWN FROM INTERIOR SURFACE OF EXTERIOR MASONRY BUILDING WALLS.
7. MOUNT FLY TRAPS AT 5'-0" ABOVE THE FINISHED FLOOR IN THE DELI/BAKERY AND PRODUCE PREP.
8. SEE SHEET E1.02 FOR TELEPOLE INFORMATION.
9. ALL ELECTRICAL WIRING WILL BE DONE IN STRICT ACCORDANCE WITH THE N.E.C. NO COLOR CHANGES IN WIRE RUNS, MISLABELED CIRCUITS, ETC. ALL WIRING SHALL BE DONE IN ACCORDANCE WITH FOOD LION STANDARDS. ONLY NEAT, FIRST QUALITY WORK WILL BE ALLOWED. 8.ALL BRANCH CIRCUIT PANELBOARDS SHALL BE VACUUMED. ALL ELECTRICAL ENCLOSURE COVERS SHALL BE INSTALLED AND ADEQUATELY SECURED TO OBTAIN PROJECT CLOSE OUT.
10. ALL BRANCH CIRCUIT PANELBOARDS, SAFETY DISCONNECTS, ELECTRICAL DISTRIBUTION EQUIPMENT, MAIN BREAKERS, AND MAIN SERVICE DISCONNECTS SHALL BE LABELED WITH PHENOLIC TAGS, BLACK ON WHITE, 1.5" TALL. DISTRIBUTION SECTIONS SHALL BE LABELED ACCORDING TO ARC FLASH LABELS.
11. THE ELECTRICAL CONTRACTOR SHALL PROVIDE AND INSTALL CORRECTED TYPE WRITTEN PANEL SCHEDULES IN ELECTRICAL PANELS, NEW AND EXISTING, AT THE END OF THE PROJECT. HAND WRITTEN SCHEDULES SHALL BE MAINTAINED THROUGHOUT THE PROJECT.
12. SCALES SHALL BE FED FROM A CIRCUIT THAT IS CONTINUOUSLY ENERGIZED (NOT CONTROLLED BY THE ENERGY MGMT SYSTEM)
13. COORDINATE REMOVAL/REPLACEMENT OF REFRIGERATED CASES WITH THE REFRIGERATION CONTRACTOR AND THE FOOD LION CONSTRUCTION SUPERVISOR.
14. ALL SINGLE PHASE RECEPTACLES RATED 150 VOLTS TO GROUND OR LESS, 50AS OR LESS; AND THREE-PHASE RECEPTACLES RATED 150 VOLTS OR LESS, 100 AMPS OR LESS INSTALLED IN THE LOCATIONS SPECIFIED IN NEC 2017 ART. 210.8(B)(1) THROUGH (10), SHALL HAVE GROUND FAULT CIRCUIT INTERRUPTER PROTECTION FOR PERSONNEL.

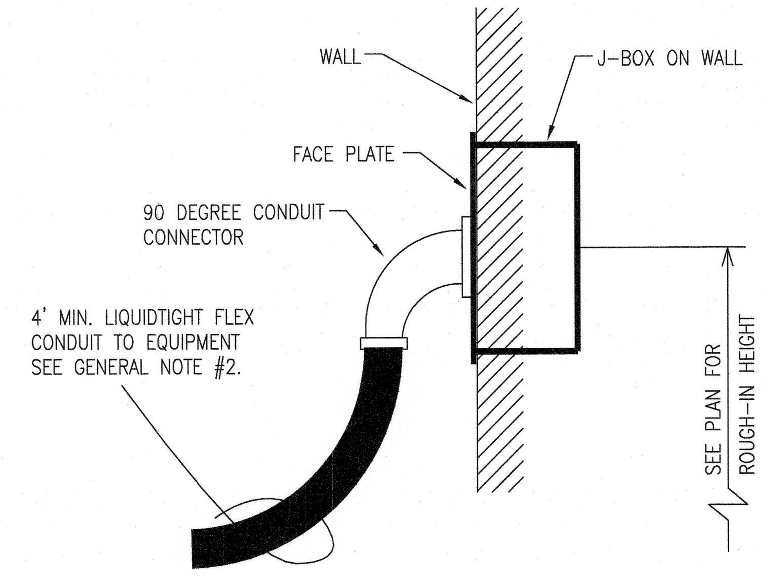

2 POWER CONNECTION DETAIL
E4.01 NOT TO SCALE

ADDED DEMAND FOR KITCHEN EQUIPMENT	
11000	CONVECTION OVEN
17280	HOT WING BAR
1800	COUNTER INDUCTION RANGE
1200	GLASS DOOR REF
11000	HOT DELI CASE
540	FLY TRAP
42820	TOTAL
x0.65	
27833	
ADDITION D/B TOTAL 27.833 KVA	

DELI/BAKERY POWER PLAN KEY NOTES

1. EXISTING EQUIPMENT - RELOCATED. PROVIDE NEW CONNECTION AS REQUIRED AND EXTEND EXISTING CIRCUITRY. FIELD VERIFY CONDITIONS AND EXTENT OF WORK.
2. HOT DELI CASE RECEPTACLES, GFCI, WP, PROVIDED WITH CASE. COORDINATE REQUIREMENTS AND CONDUIT ROUTING WITH CASE INSTALLATION.
3. HOT CASE: 208V, 3PH, 31.2A
4. PROVIDE NEMA 3R DISCONNECT SWITCH 208V, 100 AMP/3PH FOR RTUP FOR RTU PER MANUFACTURER NAME PLATE. ELECTRICAL CONTRACTOR TO COORDINATE ALL ELECTRICAL REQUIREMENTS WITH MANUFACTURER PRIOR TO ROUGH-IN.
5. RECEPTACLE AND COMMUNICATION CONNECTION FOR DELI MONITOR MOUNTED IN CEILING TILE, COORDINATE EXACT LOCATION. CAT-5e COMMUNICATION CABLES TO BE PROVIDED BY OTHERS (MACRO).
6. PROVIDE NEMA 3R- 3P DISCONNECT SWITCH 30 AMP FOR HOOD EXHAUST FAN PER MANUFACTURER NAME PLATE TO BE WIRED VIA HOOD CONTROL PANEL. ELECTRICAL CONTRACTOR TO COORDINATE ALL ELECTRICAL REQUIREMENTS WITH MANUFACTURER PRIOR TO ROUGH-IN.
7. ELECTRICAL CONTRACTOR TO PROVIDE NEW 2-POLE 30A BREAKER IN ELECTRICAL DEFROST PANEL MOUNTED IN RACK 'C' FOR CASE C3 IF EXISTING BREAKER DOES NOT MATCH THIS SIZE. EC SHALL EXTEND 3#6 AWG CU, 1#6 CU GND IN 3/4" C. FROM CASE C3 TO RACK 'C' LOCATED IN MECHANICAL ROOM.ESTIMATED WIRING SIZE BASED ON 300 FT RUN EC SHALL CONFIRM ACTUAL RUN LENGTH IN THE FIELD AND UP-SIZE WIRING AS REQUIRED.ELECTRICAL CONTRACTOR TO COORDINATE ALL ELECTRICAL REQUIREMENTS WITH REFRIGERATION CONTRACTOR PRIOR TO ROUGH-IN.

INTERPLAN
INTERPLAN LLC
ARCHITECTURE ENGINEERING PERMITTING
220 E. CENTRAL PKWY, STE 4000
ALTAMONTE SPRINGS, FL 32701
407.645.5008

ARCHITECT'S SEAL:

CORPORATE SEAL:
STATE OF SOUTH CAROLINA — INTERPLAN, LLC — ORLANDO, FL — 01060 — REGISTERED ARCHITECT
SOUTH CAROLINA — INTERPLAN, LLC — No. C02393 — CERTIFICATE OF AUTHORIZATION

ENGINEER'S SEAL:
SOUTH CAROLINA — LICENSED PROFESSIONAL ENGINEER — No. 34876 — STACY TREVOR HENSON
JUL 06 2022

REVISIONS
NO DATE REMARKS

FOOD LION
2110 Executive Drive, Salisbury, NC 28147
telephone: 704.633.8250
foodlion.com
Food Lion is an AHOLD DELHAIZE company.

FOOD LION REMODEL STORE #2839

860 PARRIS ISLAND GTWY
BEAUFORT, SC 29906

PROJECT NO: 2021.1218
DATE: 7/5/22

ENLARGED DELI BAKERY ELECTRICAL PLAN

CHECKED: SN DRAWN: MM

COPYRIGHT © 2022 INTERPLAN LLC RESERVES COPYRIGHT & OTHER RIGHTS RESTRICTING THESE DOCUMENTS TO THE ORIGINAL SITE OR PURPOSE FOR WHICH THEY WERE PREPARED. REPRODUCTIONS, CHANGES OR ASSIGNMENTS ARE PROHIBITED.

JONLOP - 07/05/2022 3:51:00 PM